What's New in PV Elite V23 and CodeCalc

The following changes have been made to PV Elite and CodeCalc.

PV Elite and CodeCalc Version 23.0

Input Processor and Analysis

- Renamed **Flange Dialog** to **Flange Input** and added a new option to **Flange Input**. **Compute per EN 1591 or EN 13445 Annex G** opens the new **EN 1591/Annex G Input** dialog box. (CR-TX-29082)
- Added a configuration option to allow the software to calculate the design length of the vessel section, *L*, as a line of support for external pressure calculations on lap joint flange elements. (CR-TX-35307)
- Added the ability to calculate longitudinal weld seam locations on cylindrical and conical elements. (CR-TX-29097)

Documentation/Help

- Added a graphic and corrected text to better explain tubesheet Backing Ring Inside Diameter and Backing Ring Outside Diameter. (CR-TX-35266, TR-TX-35267)
- Corrected the code edition for Mexico Sismo from 2008 to 2015. (TR-TX-34955)
- Corrected the descriptions of abutting nozzles for the Nozzle Attachment parameter. (TR-TX-35457)
- Added a help topic for the The computed MAWP for pressure testing is based on pressure cases only option on the Tubesheet Type and Design Code Tab (Heat Exchanger Tubesheet Input Dialog Box). (CR-TX-36805)
- Clarified the description of Weight to Use for Lifting Analysis on the Equipment Installation and Miscellaneous Options Dialog Box. (CR-TX-37111)
- Added UNC bolt information to the flange Nominal Bolt Diameter. (CR-TX-36374)
- Added ASME Section VIII, Division 2, Table 4.6.1 to Welded Flat Head Attachment Sketch. (CR-TX-37853)
- Clarified the behavior of the Non-Circular Platform? option.

PV Elite Overview

PV Elite consists of nineteen modules for the design and analysis of pressure vessels and heat exchangers, and assessment of fitness for service. The software provides the mechanical engineer with easy-to-use, technically sound, well-documented reports. The reports contain detailed calculations and supporting comments that speed and simplify the task of vessel design, re-rating, or fitness for service. The popularity of PV Elite is a reflection of Intergraph CADWorx and Analysis Solutions' expertise in programming and engineering, and dedication to service and quality.

Calculations in PV Elite are based on the latest editions of national codes such as the ASME Boiler and Pressure Vessel Code, or industry standards such as the Zick analysis method for horizontal drums. PV Elite offers exceptional ease of use that results in dramatic improvement in efficiency for both design and re-rating.

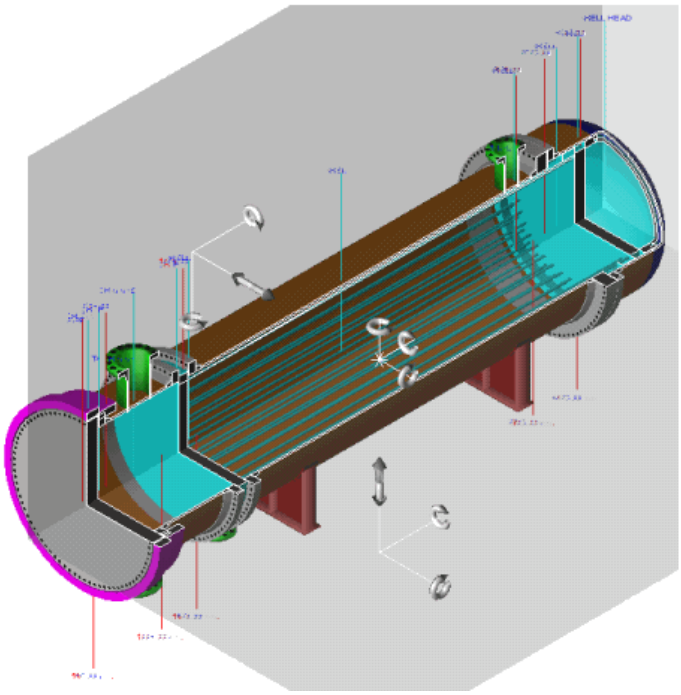

PV Elite features include:

- A graphical user interface allowing you to add model data while seeing the vessel elements as they are added.
- Horizontal and vertical vessels of cylinders, conical sections, and body flanges, as well as elliptical, torispherical, hemispherical, conical, and flat heads.
- Saddle supports for horizontal vessels.
- Leg and skirt supports at any location for vertical vessels.
- Extensive on-line help.
- Dead weight calculation from vessel details such as nozzles, lugs, rings, trays, insulation, packing, and lining.
- Wall thickness calculations for internal and external pressure according to the rules of ASME Section VIII Divisions 1 and 2, PD 5500, and EN-13445.
- Stiffener ring evaluation for external pressure.
- Wind and seismic data using the American Society of Civil Engineers (ASCE) standard, the Uniform Building Code (UBC), the National (Canadian) Building Code, India standards, as well as British, Mexican, Australian, Japanese, and European standards.
- A user-defined unit system.
- A complete examination of vessel structural loads, combining the effects of pressure, dead weight, and live loads in the empty, operating, and hydrotest conditions.
- Logic to automatically increase wall thickness to satisfy requirements for pressure and structural loads, and introduce stiffener rings to address external pressure rules.
- Structural load evaluation in terms of both tensile and compressive stress ratios to the allowable limits.
- Detailed analysis of nozzles, flanges, and base rings.
- Material libraries for all three design standards.
- Component libraries containing pipe diameter and wall thickness, ANSI B16.5 flange pressure vs. temperature charts, and section properties for AISC, British, Indian, Japanese, Korean, Australian and South African structural shapes.
- Thorough and complete printed analysis reports, with definable headings on each page. Comments and additions may be inserted at any point in the output.